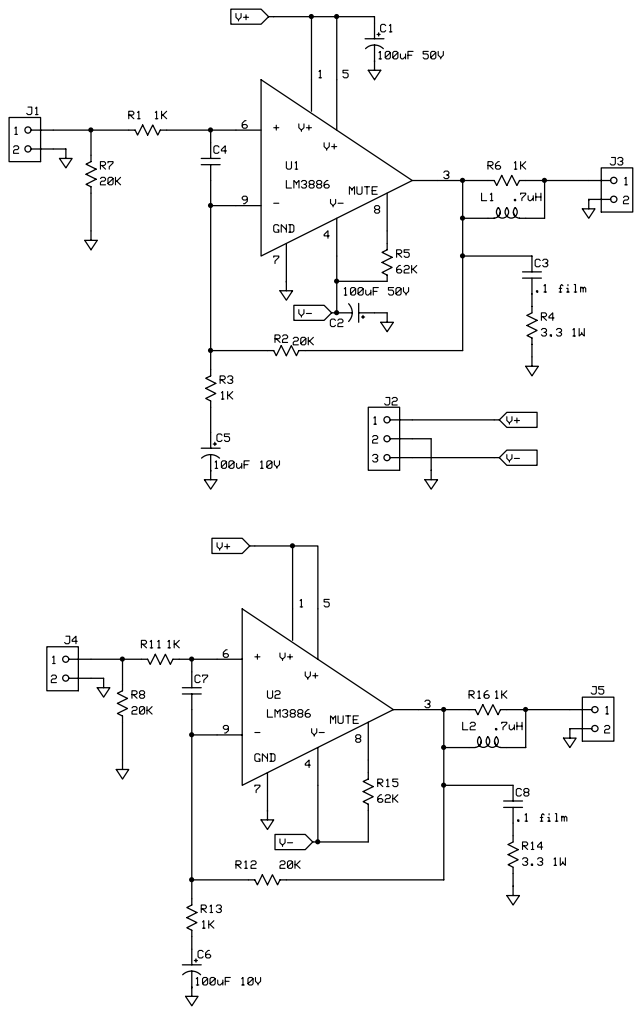

Erickson Engineering		
LM3886 Modular Amp		
Dave Erickson	Rev 1.0 9/21/2005	Page 1 / 1