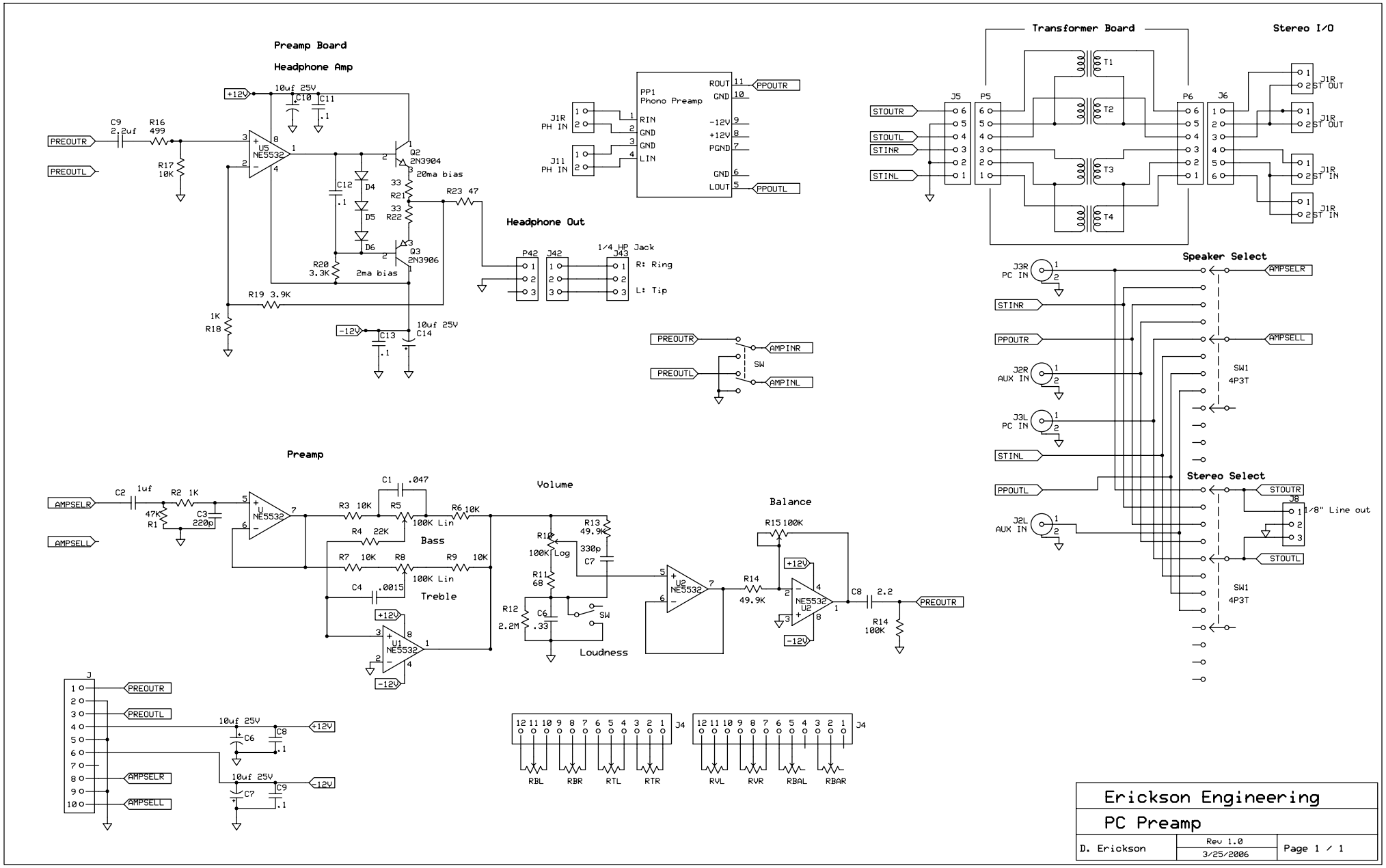

C:\Projects\Audio\PC Preamp\pc preamp.sch - Sheet2