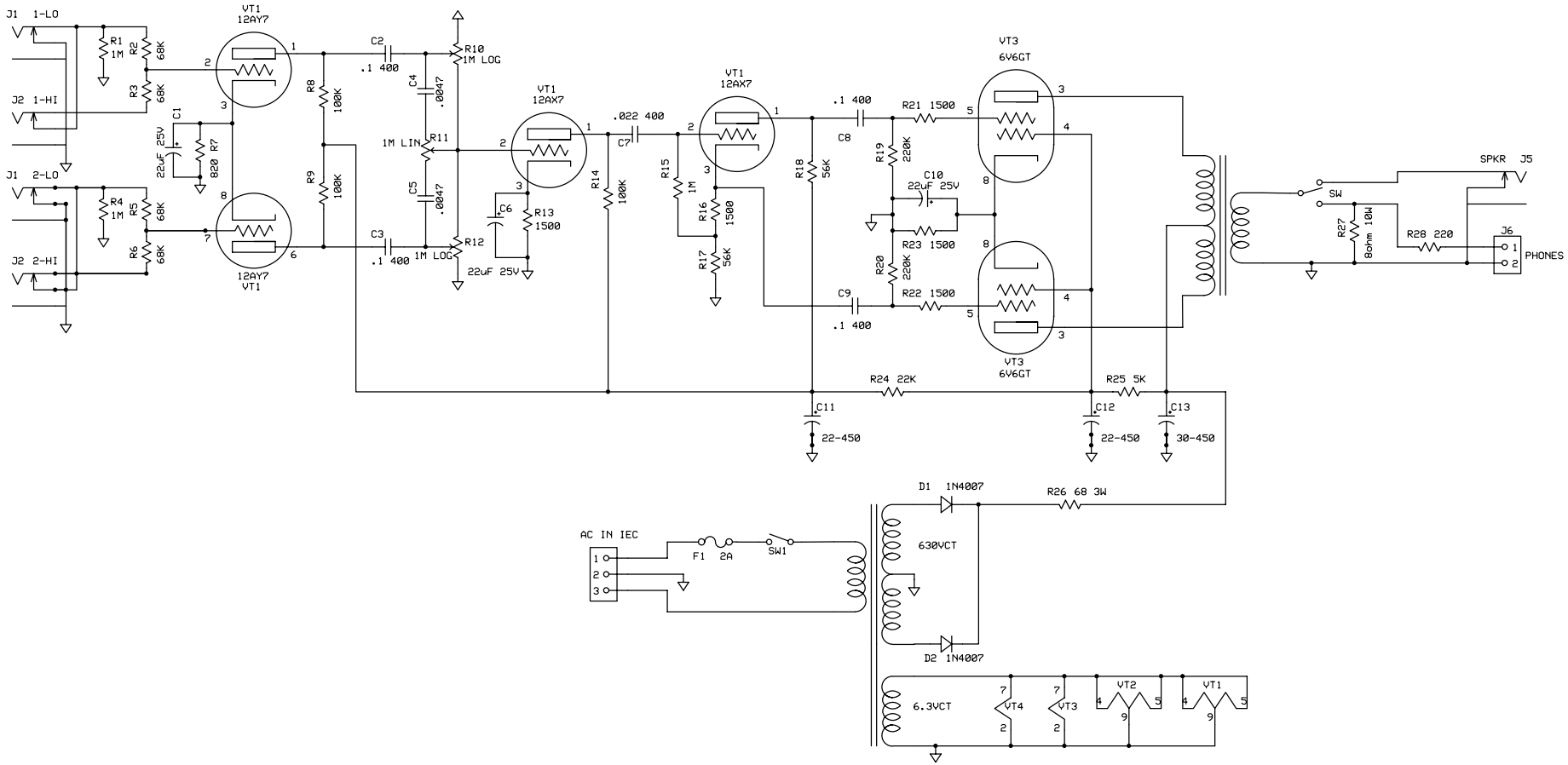

Erickson Engineering		
Fender 5E3 Clone		
D. Erickson	Rev 1.0 1/9/2010	Page 1 / 1